WHITE PAPER

SEPTEMBER 2020

PHOENIX CONTACT
INSPIRING INNOVATIONS

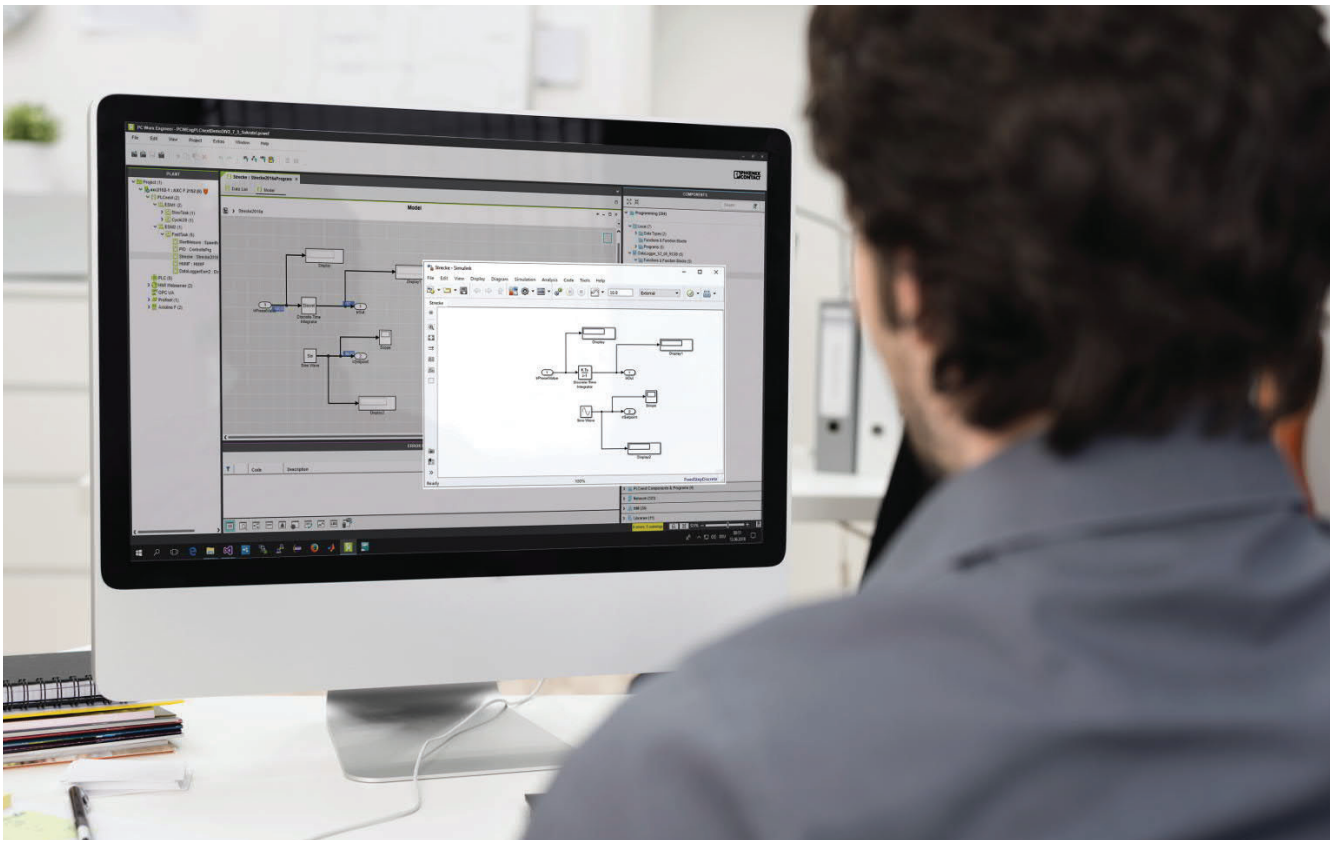

Using Matlab Simulink and PLCnext Technology in the process industry

Simplifying the execution of complex control functions

Thilo Glas, Senior Specialist Engineering in the Industry Management Process, Phoenix Contact Electronics GmbH

Prithiv Thomas, International Strategic Account Manager for Process Automation, Phoenix Contact USA

INSIDE:

Introduction

In spite of digitalization and Industry 4.0, the control systems of process plants remain technically complex, even when broken down into their smaller elements. For example, the execution of fast cascade control on a small controller is a complex challenge. But the right tools, such as the combination of the tried-and-trusted Matlab Simulink software and advanced PLC technology, can help manage the complexity (lead image).

Many control functions, such as fast cascade control and fast loop control, are hard to implement. These functions are based on the execution of complex mathematical formulas and can be programmed for a PLC in IEC 61131 code, which might not be the most practical. A complex formula written by a programmer in Structured Text consistent with IEC 61131 is often unrecognizable. As a result, optimization and debugging become needlessly complicated. Consequently, testing the complex function will prove difficult. Besides, improving a closed-loop control system is already time-consuming, even when it involves less complex tasks.

U003124A.07.20

PHOENIX CONTACT • P.O. BOX 4100 • HARRISBURG, PA 17111-0100
Phone: 800-888-7388 • 717-944-1300 • Technical Service: 800-322-3225 • Fax: 717-944-1625
E-mail: info@phoenixcon.com • Website: www.phoenixcontact.com

These challenges are more or less typical problems that programmers face. As technology advances, additional issues will emerge. For instance, in Europe, the process industry is standardizing on a modular automation approach, particularly since the introduction of Module Type Package (MTP), a standardized software interface compliant with VDI/VDE/NAMUR 2658.

Today's modules each have their own controller performing closed-loop control, which takes the load off the central control system. But the environment in which programmers execute controls such as the one mentioned above has changed: from central control systems engineering to control engineering in general.

Ready-to-use function modules

Matlab Simulink is the go-to software for programmers in control technology who want to simplify the execution of complex tasks. It is an advanced tool for developing and testing mathematical as well as control technology solutions, and to convert these solutions to code. Cleve Moler from the University of New Mexico developed Matlab in the 1970s and turned it into a commercially available product in the mid-1980s. Matlab has become widely used since 2000, with increased adoption since the University included the tool in its curriculum.

Thanks to the later expansion of Matlab by the Simulink module, the software now enables the simulation of programs and the use of blocks in systems modeling. This makes it possible to graphically visualize systems in a clear manner. A wide variety of "toolboxes" for example, the "Signal Processing Toolbox" or the "Fuzzy Logic Toolbox," which enable the use of preprogrammed function modules are available to be used with the software.

As mentioned above, such solutions have been around since the 1980s. What is new is that users can now easily combine the system with an industry-grade controller, because the PLC has been added as the "target" for the code. Previously, microcontrollers were the only option for a runtime environment, and C code was all that could be generated. Now, a complex closed-loop controller can be designed in Simulink, tested over the complete frequency range under influence of disturbance variables, optimized by means of the Simulink tools, and finally, exported as a program for the PLC.

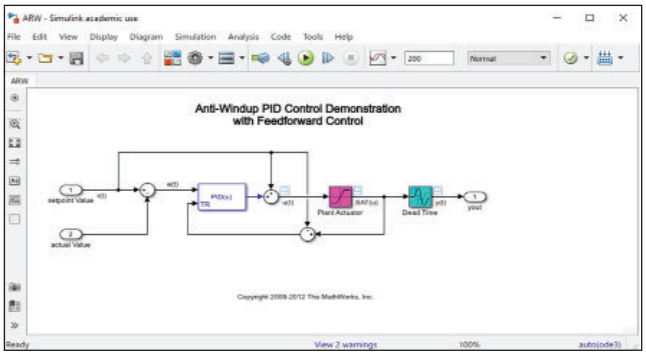

Figure 1:
Closed-loop control circuit representation in Simulink

Export to the target controller

This gives users a wide variety of options not typically provided by control engineering environments. The testing and improving of closed-loop controllers are particularly tedious processes, during which engineers will appreciate anything that makes their job easier. Matlab Simulink covers all classic methods of control systems engineering, such as Bode diagrams, root locus diagrams, or frequency response plots, which facilitates the process of developing code. Another advantage of the software is that it enables graphical blocks to be used for control design. For example, a gain can simply be added by dragging and dropping it. Design takes place not in a PLC environment, but on a level more suitable for control systems engineering (fig. 1).

When programmers are done planning the closed-loop controller in a conventional PLC environment, they face the challenge of testing. In such an environment, input signals can be simulated; however, this proves to be difficult when carried out over the entire frequency range. Because Simulink has so many possibilities, the process of commissioning the controller in the field can be shortened significantly because the programmer can test the functionality of the closed-loop controller in advance. After the controller has been completely modeled and tested, the new system feature takes effect: the configured controller can be exported to fit the specific PLC system. Targets – also referred to as PLC coders – are available for the TIA portals of manufacturers such as Siemens, B&R, Codesys, Phoenix Contact, and others. This makes it easier to connect to hard real-time systems with all their I/O and

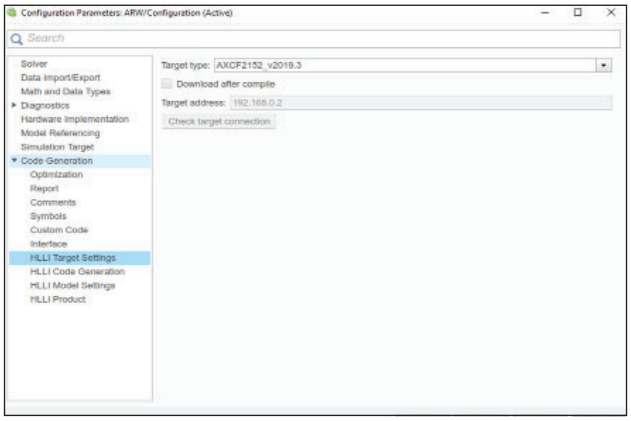

Figure 2:
Selecting the AXC F 2152 PLCnext controller as the target

fieldbus systems. And all in all, Matlab Simulink has evolved into a readily available and useful tool for automation engineering (fig. 2).

Application programs from the online store

Phoenix Contact's PLCnext Technology, a new, open generation of controllers based on the Linux operating system, offers various advantages. The economical AXC F 2152 PLCnext controller, with its two separate 800 MHz processors, offers a well-suited platform for running a Simulink model on one core and processing standard tasks on the other one. The code generated in Simulink easily integrates into the project as a program, and can be processed by one of the two processors with any task duration. This enables the user to open the generated models in the engineering environment and to monitor them online during their runtime for extensive transparency. For licensing reasons, changes to the model can only be made in Matlab Simulink (fig. 3).

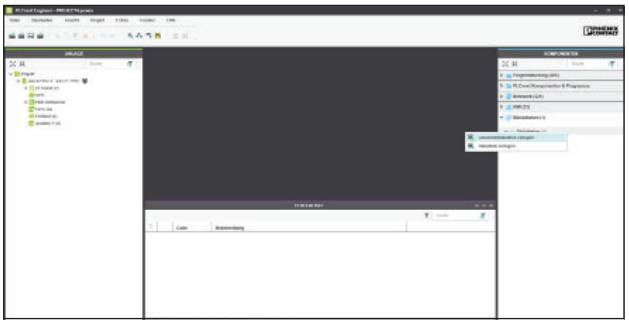

Figure 3:
Adding a Simulink model as a library to the PLCnext Engineer environment

Today's control technology offers even more possibilities. For example, users can download an application program or parts of it from the PLCnext Store to the controller, just like they are used to doing with apps for their smartphones. To this end, the AXC F 2152 connects to the PLCnext Store via its user ID. Then, the controller is logged in via its UUID (Universally Unique Identifier), and the user selects the application to be installed on the controller from the store. Users thus have access to turnkey application programs without the need to use any engineering system or to be proficient in programming according to IEC 61131. Moreover, the store contains libraries and parts of programs. So, an institute could design a complex closed-loop controller and make it available in an easy way via the PLCnext Store – either for free or for a licensing fee. Industry 4.0 has thus found its way into the process industry (fig. 4).

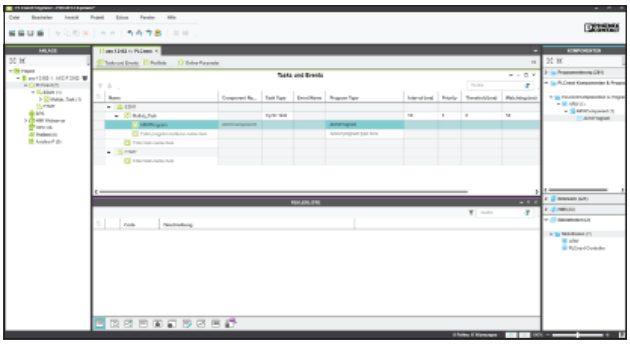

Figure 4:
Adding the Simulink model as an independent task

Combining different programming languages in real time

The NOA concept enables open, secure, and scalable systems, such as PLCnext Technology, to be used in the process industry. The ecosystem makes it possible to combine program sequences written in different programming languages in real time. The patent-pending task handling system enables program routines to run as classic IEC 61131 code. High-level language programs that have, for example, been created in C/C++ or C# therefore run simultaneously with the IEC 61131 programs (fig. 5).

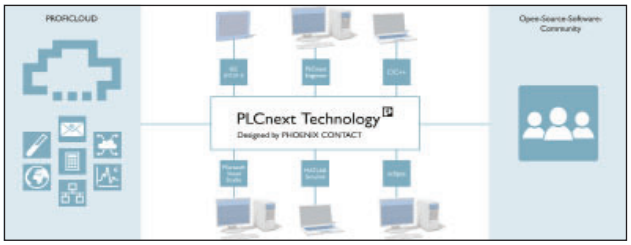

Figure 5:
PLCnext Technology enables developers to program independently of one another in the language they prefer.

Conclusion

PLCnext Technology ensures consistent data exchange as well as the synchronous execution of the program code, and makes high-level language programs deterministic automatically. Developers can therefore work efficiently on individual parts of a complex application at the same time and independently from one another, and in their preferred programming language. Thus, the experience of the IEC 61131 experts can be coupled with new ideas and program blocks from the high-level language worlds, as well as with the knowledge of young developers from the IT environment.

ABOUT PHOENIX CONTACT

Phoenix Contact develops and manufactures industrial electrical and electronic technology products that power, protect, connect, and automate systems and equipment for a wide range of industries. Phoenix Contact GmbH & Co. KG, Blomberg, Germany, operates 50 international subsidiaries, including Phoenix Contact USA in Middletown, Pennsylvania.

For more information about Phoenix Contact or its products, visit **www.phoenixcontact.com,** call technical service at **800-322-3225,** or e-mail **info@phoenixcon.com.**

PHOENIX CONTACT • P.O. BOX 4100 • HARRISBURG, PA 17111-0100
Phone: 800-888-7388 • 717-944-1300 • Technical Service: 800-322-3225 • Fax: 717-944-1625
E-mail: info@phoenixcon.com • Website: www.phoenixcontact.com